TOSACA

New API / ASME safety relief valves 2500#

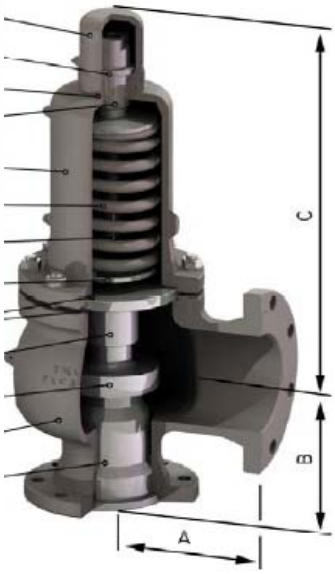

Inlet	Outlet	Orifice	Area (mm^2)	A (mm)	B (mm)	C (mm)	Weight (kg)
2500#	300#						
1 1/2"	3"	D	71	178	140	325	30
1 1/2"	3"	E	133	178	140	325	30
1 1/2"	3"	F	201	178	140	325	20
2"	3"	G	346	172	156	444	41